Niehues
Hydraulik · Automation

AC-Motoren GmbH

Data sheet for 3-Phase Squirrel Cage Motors

Motortype	FCA 80B - 4 / PHE	IM B5 / IM 3001
	Premium High Efficiency	

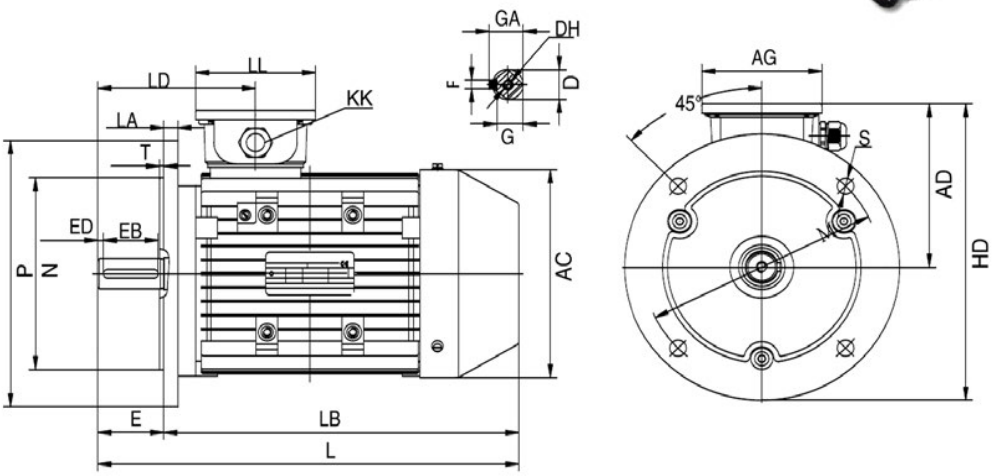

TYP	AC	AD	AG	D	DH	E	EB	ED	F	G	GA	HD	KK	L	LA	LB	LD	LL	M	N	P	S	T
80	158	129	101	19	M6X16	40	30	5	6	15,5	21,5	229	1-M20X1,5	290	12	250	115	101	165	130	200	12	3,5

Electrical datas

Rated motor power	**0,75 / 0,90**	KW 50 / 60 Hz
Rated motor speed	**1420**	min-1 / 50 Hz
	1704	min-1 / 60 Hz
Rated motor voltage	**230**	V Δ / 50 Hz
(+- 5%)	**400**	V Y / 50 Hz
	265	V Δ / 60 Hz
	460	V Y / 60 Hz
Rated motor torque	**5,04**	Nm (Mn)
Rated motor current 50Hz	**3,08 / 1,77**	A (In)
Rated motor current 60Hz	**3,21 / 1,85**	A (In)
Starting motor current	**6,5**	x In
Starting motor torque	**2,3**	x Mn
Breakdown motor tor.	**2,3**	x Mn
Efficiency	**82,5%**	by 100 % Load
	82,5%	by 75 % Load
	80,9%	by 50 % Load
IE class	**IE3**	
Power factor at	**0,74**	by 100 % Load

Mechanical datas

Noise level	**44,0**	dB(A)
Moment of inertia	**0,00250**	Kgm²
Bearing A - Site	**6204.ZZ.C3**	
Bearing B - Site	**6204.ZZ.C3**	
Bearing lifetime	**20000 h**	by max Fr + Fx
max. Radialload (Fr)	**802 N**	middle of shaft
max. Axialload (Fx)	**590 N**	pull force
	590 N	pressure force
Locating bearing	**loose**	Standard

Explosion protection

type of protection	**Without**

General datas

Frame size	**80**	
Type of construction	**IM B5 / IM 3001**	
Weight	**12,9**	kg
Frame material	**Aluminium**	
Protection	**IP 55**	
Insulation	**F utilized to B**	
Tropical insulation	**no**	
Vibration level	**A**	
Duty type	**S1**	
Direction of rotation	**bi-directional**	
Method of cooling	**IC 411**	
Cable entries	**1-M20 x 1,5**	
Norm / Standards	**IEC / DIN / ISO / VDE / EN**	
Execute at	**IEC 60034 -1**	
Paintwork	**RAL 7030**	gray
Warranty	**12 month**	

Site conditions

Ambient temperature	**- 20 bis + 40**	°C
Altitude above sea level	**1000**	m over sea

Special configurations

Feet removeable
.
.
.
.
.
.
.
.
.
.
.
.

7HFKQLVFKH bQGHUXQJHQ XQG ,UUWP HUYRUEHKDOWQ 7HFKQLFDOP RGLILFDWLRQV UHVHUYHG HUURU V H[FHSWG

AC-MOTOREN GmbH, Einsteinstr. 17, D-64859 Eppertshausen, Tel. 06071-49887-0, Fax: 06071-49887-20,
www.ac-motoren.de

Archivierung: 02/2015