Rubrik 8.63
BSP - Parallel - wd - OMD

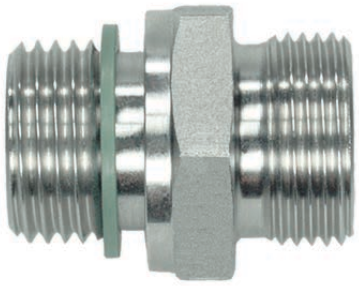

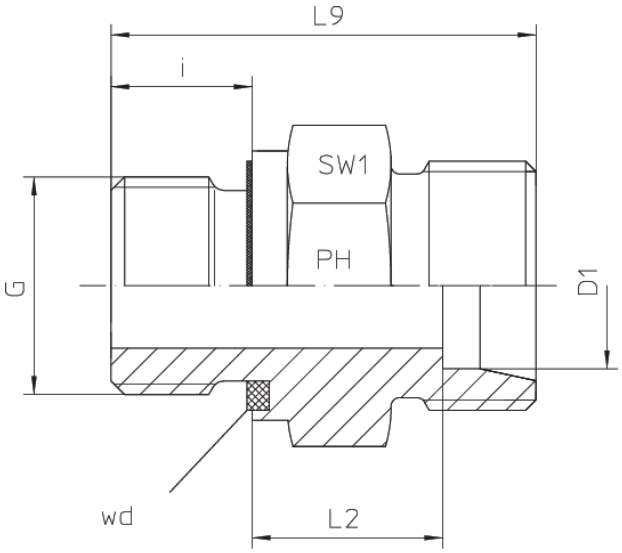

Male Stud Coupling Bodies S-Series Thread: BSP - Parallel wd = Sealing by an Elastomer Profiled Ring - FKM

Pressure	Tube O.D.	Thread	Approx. Dimensions					Order-Code
PN	D1	G	L2	L9	i	SW1		
		Series S						
800	6	G 1/8"	13,0	28,0	8	14		GE-SR-06-G 1/8"-wd-OMD
800	6	G 1/4"	13,0	32,0	12	19		GE-SR-06-G 1/4"-wd-OMD
800	6	G 3/8"	15,5	34,5	12	22		GE-SR-06-G 3/8"-wd-OMD
630	6	G 1/2"	17,0	38,0	14	27		GE-SR-06-G 1/2"-wd-OMD
800	8	G 1/8"	14,0	29,0	8	17		GE-SR-08-G 1/8"-wd-OMD
800	8	G 1/4"	15,0	34,0	12	19		GE-SR-08-G 1/4"-wd-OMD
800	8	G 3/8"	15,5	34,5	12	22		GE-SR-08-G 3/8"-wd-OMD
630	8	G 1/2"	15,0	36,0	14	27		GE-SR-08-G 1/2"-wd-OMD
800	10	G 1/8"	13,5	29,0	8	19		GE-SR-10-G 1/8"-wd-OMD
800	10	G 1/4"	14,5	34,0	12	19		GE-SR-10-G 1/4"-wd-OMD
800	10	G 3/8"	15,0	34,5	12	22		GE-SR-10-G 3/8"-wd-OMD
630	10	G 1/2"	13,5	35,0	14	27		GE-SR-10-G 1/2"-wd-OMD
420	10	G 3/4"	17,5	41,0	16	32		GE-SR-10-G 3/4"-wd-OMD
630	12	G 1/4"	16,5	36,0	12	22		GE-SR-12-G 1/4"-wd-OMD
630	12	G 3/8"	17,0	36,5	12	22		GE-SR-12-G 3/8"-wd-OMD
630	12	G 1/2"	17,5	39,0	14	27		GE-SR-12-G 1/2"-wd-OMD
420	12	G 3/4"	17,5	41,0	16	32		GE-SR-12-G 3/4"-wd-OMD
630	14	G 1/4"	17,0	37,0	12	24		GE-SR-14-G 1/4"-wd-OMD

© PH Industrie-Hydraulik GmbH und Co. KG | Telefon: +49 (0) 2339/6021

630	14	G 3/8"	17,0	39,0	12	24		GE-SR-14-G 3/8"-wd-OMD
630	14	G 1/2"	19,0	41,0	14	27		GE-SR-14-G 1/2"-wd-OMD
420	14	G 3/4"	19,0	43,0	16	32		GE-SR-14-G 3/4"-wd-OMD
630	16	G 1/4"	17,5	38,0	12	27		GE-SR-16-G 1/4"-wd-OMD
630	16	G 3/8"	18,0	38,5	12	27		GE-SR-16-G 3/8"-wd-OMD
630	16	G 1/2"	18,5	41,0	14	27		GE-SR-16-G 1/2"-wd-OMD
420	16	G 3/4"	20,5	45,0	16	32		GE-SR-16-G 3/4"-wd-OMD
420	16	G 1"	22,5	49,0	18	41		GE-SR-16-G 1"-wd-OMD
420	20	G 3/8"	18,0	40,5	12	32		GE-SR-20-G 3/8"-wd-OMD
420	20	G 1/2"	20,5	45,0	14	32		GE-SR-20-G 1/2"-wd-OMD
420	20	G 3/4"	20,5	47,0	16	32		GE-SR-20-G 3/4"-wd-OMD
420	20	G 1"	22,5	51,0	18	41		GE-SR-20-G 1"-wd-OMD
420	20	G 1 1/4"	22,5	53,0	20	50		GE-SR-20-G 1 1/4"-wd-OMD
420	25	G 1/2"	23,0	49,0	14	41		GE-SR-25-G 1/2"-wd-OMD
420	25	G 3/4"	23,0	51,0	16	41		GE-SR-25-G 3/4"-wd-OMD
420	25	G 1"	23,0	53,0	18	41		GE-SR-25-G 1"-wd-OMD
420	25	G 1 1/4"	23,0	55,0	20	50		GE-SR-25-G 1 1/4"-wd-OMD
420	30	G 3/4"	25,5	55,0	16	46		GE-SR-30-G 3/4"-wd-OMD
420	30	G 1"	23,5	55,0	18	46		GE-SR-30-G 1"-wd-OMD
420	30	G 1 1/4"	23,5	57,0	20	50		GE-SR-30-G 1 1/4"-wd-OMD
420	30	G 1 1/2"	23,5	59,0	22	55		GE-SR-30-G 1 1/2"-wd-OMD
420	38	G 1"	26,0	60,0	18	55		GE-SR-38-G 1"-wd-OMD
420	38	G 1 1/4"	23,0	62,0	20	55		GE-SR-38-G 1 1/4"-wd-OMD
420	38	G 1 1/2"	26,0	64,0	22	55		GE-SR-38-G 1 1/2"-wd-OMD
250	38	G 2"	26,5	65,5	23	70		GE-SR-38-G 2"-wd-OMD

© PH Industrie-Hydraulik GmbH und Co. KG | Telefon: +49 (0) 2339/6021